Research on Image Information Extraction Algorithm Based on Laser Recognition

Yan Yang

Officers College of Pap, Chengdu, Sichuan, 610213, China

Keywords: the paper must have at least one keyword

Abstract: The image acquisition and processing system is an important part of the laser imaging radar system. The article briefly introduces the design, composition, working process and software flow of an image acquisition and processing system with a master/slave computer structure. Use the interrupt function of the master/slave computer to realize the frame real-time acquisition, processing and display of image data. A dedicated DMA controller is designed using CPLD and shares two identical dual-port memories with the slave computer ADSP21020, and continuous image buffering and acquisition processing are completed by synchronously switching memory control. The test results show that the system can well complete the frame real-time acquisition, processing and display of laser imaging radar.

1. Introduction

With the development of laser technology and computer and other related technologies, laser imaging radar guidance technology has received more and more attention and has been included in advanced guidance methods for research. As an important part of laser imaging radar, the laser image acquisition and processing system must complete frame real-time acquisition and processing. In order to facilitate the observation of the collected and processed image, the display of the image must be completed. Generally, image acquisition uses a video image acquisition card to display or store the acquired images. The imaging mechanism of laser imaging radar is different from that of ordinary cameras. The laser imaging radar mentioned in the article uses unit pulse laser emission, scans the target through the scanning system, and the unit device receives the target echo signal; under the synchronization control of the scan control signal, the echo signal is preprocessed to generate laser image data. In the case that the laser divergence angle and the ranging system are determined, the maximum distance that the lidar can measure mainly depends on the laser pulse peak power; restricted by the development level of the laser device, the determined high pulse peak power ranging, the laser pulse emission The repetition frequency will be limited, and the number of pixels produced per unit time is also limited, that is, the number of pixels and frame rate of each frame of image will not be very high. The image resolution of LiDAR mentioned in the article is 32×32, and the frame rate is 4 frames/s. It can be seen that the laser imaging radar is completely different from the usual camera.

2. Laser Image Recognition Method

Gabor filter is a better multi-scale decomposition technique than wavelet transform. It can select and extract spatial frequency features from multiple directions, and can obtain the local structural features of underwater laser images, which is robust to noise. It's great, so this article chooses to extract the features of underwater laser images.

Let z = (x, y) denote the pixels of the underwater laser image, then the Gabor filter can be defined as follows:

$$\psi_{\mu,\nu}(z) = \frac{\|k_{\mu,\nu}\|^2}{\sigma^2} e^{(-k_{\mu,\nu}{}^2 z^2/2\sigma^2)} \left[e^{ik_{\mu,\nu}z} - e^{-\sigma^2/2}\right]$$

A lot of actual research results show that when σ = 2π, kmax = π/2, f = σ2, ideal laser image

  DOI: 10.25236/icited.2021.091

recognition results can be obtained. In this paper, 5 scales (ν = 0, 1..., 4) and 8 directions (μ = 0, 1,..., 7) Gabor filter groups are used to extract features of underwater laser image I(x, y). The convolution operation of underwater laser image and Gabor filter is:

$$G_{\mu,\nu}(x,y) = I(x,y) * \psi_{\mu,\nu}(z)$$

The feature extraction of underwater laser image I(x, y) through Gabor filter group can obtain 40 underwater laser image features, which form a feature vector.

3. Hardware Design of Laser Image Acquisition System

The laser imaging radar uses a Q-switched pulse DPL laser as the emission source. The laser pulse is scanned and emitted, and the unit receiving device scans to receive the echo signal. After signal preprocessing, the image acquisition and processing system synchronizes the image data by field, row, and column. Images are stored, processed and displayed sequentially. The entire imaging process is continuous, which requires the image acquisition/processing system to continuously acquire, process and display each frame of images, that is, to achieve frame real-time acquisition, processing and display.

The image acquisition and processing system includes master/slave computer system and software, DMA acquisition circuit and anti-jamming circuit. The system function block diagram is shown as in Fig. 1. The laser echo is input to the image acquisition and processing system after signal preprocessing, first passes through the anti-interference circuit, and then enters the DMA acquisition circuit. Under the control of the DMA controller, the image data is stored in the dual port according to the field, row, and column synchronization timing relationship. In the memory; after the computer ADSP21020 processes the collected image data with the corresponding algorithm, it sends an interrupt signal to the host computer PC, and transmits the processed image data to the PC; the PC can display the unprocessed and processed image data. image.

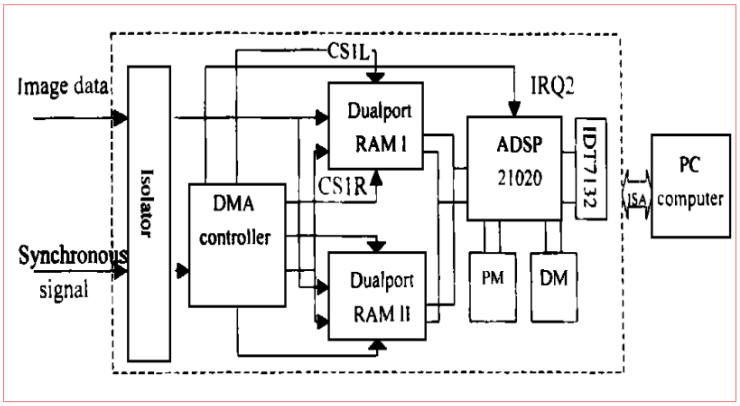

Fig .1 Block Diagram of the System

The master/slave computer system is a scheme often used in data processing and control. In the master/slave computer system, the master computer usually completes the control and management of the system's working process, such as system initialization and process control; the slave computer completes data collection and processing. There are many options for master/slave computer. This system selects PC as the master computer, and AD company's ADSP21020 as the slave computer. PC programming is flexible, man-machine dialogue is easier, and it can complete the image display function; AD company's ADSP21020 is one of the best digital signal processors at present, and its single instruction execution cycle is only 25ns, and it can achieve multiple cycles in a single cycle. Parallel operation of instructions; its open bus structure makes it easier to expand the memory and peripheral circuits, and the programming is flexible. These features ensure that image processing can be completed quickly. The ADSP21020 processing card is inserted in the ISA slot of the PC. The data exchange between the master/slave computer is realized through the dual-port memory IDT7132 on the ADSP21020 card; one port of the memory is used as the memory of the ADSP21020, and the other port occupies a section of the memory address space of the PC,

which is the master/slave computer Fast data exchange provides great convenience; considering the small capacity of dual-port memory, this method is suitable for a small amount of data exchange. In addition, the master/slave computer data exchange can also send a DMA application to ADSP21020 through the PC, directly control the program memory PM on the ADSP21020 card, and directly access the PM (read or write) through the I/O port of the PC. The PC can directly send reset, load program and run commands to ADSP21020, and can also send interrupt signal IRQ2 to ADSP21020; and ADSP21020 can also apply for interrupt IRQ 10 to the PC through the access port (0 x 800400). After the image data is collected by ADSP2 1020, it is stored in the dual-port memory IDT7132 or program memory PM after image processing, and applies for an interrupt to the PC. After the PC responds to the interrupt, the processed (or pre-processed) image data and processing results Read in, and call the display program to display the image and processing results on the monitor.

Direct memory access (DMA) is an effective solution for fast data acquisition. The image data is buffered by the data, and then one frame of image processing is performed after one full frame. In order to ensure the real-time acquisition and processing of continuous multi-frame images, this system adopts two dual-port memory IDT7024. One end of IDT7024 is used as the memory for DM A collection of image data, and the other end occupies a section of address in the ADSP21020 data memory space. The corresponding ends of the two IDT7024 occupies the same address space and the same data line (see Figure 1), so that the collection and storage address of each frame of image data is unchanged, and the memory address range for DSP to read each frame of image data is also the same, but it is only affected by DMA controller chip selection signal control, two pieces of memory are switched between the master/slave computer according to need, to ensure the uninterrupted acquisition and processing of each frame of image. The data acquisition DMA controller is designed with AMD's CPLD device MACH215, which has high flexibility and reliability. The functions of the DMA controller include the generation of the acquisition address, the switching of the memory chip selection signal, and the interrupt signal to the ADSP21020 after the memory switching is completed to notify the DSP to read the data and process it. Taking into account the high processing speed of ADSP21020, the processing time of each frame is less than the acquisition time of each frame, which can ensure that the data is processed and transmitted to the PC before the IRQ2 signal arrives.

4. System Software Design

The image acquisition, processing, display and the realization of the handshake signal inside the system are all completed under the strict control of the software, which ensures the synchronization and real-time frame of each step of acquisition, processing and display. The handshake signal is completed by the interrupt function of the PC and ADSP21020. The image acquisition processing program includes two parts: C program and DSP assembly program. The C program is the management and control program of the entire system. Its functions include PC interruption, port initialization, loading, resetting, starting, displaying images and image saving of DSP assembler, and it can also complete some simple algorithm image processing; DSP assembler Complete the initialization of ADSP21020, read the image data after receiving the interrupt request from the DMA controller, and perform image processing, and notify the PC to read the image through the interrupt request.

The system has completed the system joint test and field test of the laser imaging radar. The test results show that the system satisfies the real-time frame acquisition, processing and display tasks of lidar images, and has good anti-jamming performance. The imaging lidar has continuously imaged the mountains. The images can clearly distinguish mountains at different distances. The imaging process can be continuously collected, processed, and displayed, and single frame or continuous multiple frames can be saved when needed. The system uses a PC as the main control computer to facilitate the debugging of the development process. If the volume of its application platform is considered, it is obvious that the PC is too large. Considering that in practical applications, only control signals need to be given according to the image processing results,

without the need to display images, so the central computer of the application platform can be used as the main control computer to control and communicate with the DSP processing system; loading and running of the DSP processing program Controlled by EEPROM. If you need to display and store images during the development process, you only need to add a PC interface.

5. Conclusion

In order to obtain a more ideal laser image recognition result, a laser image recognition method based on data mining is proposed. The method first collects the Gabor features of the underwater laser image to obtain the local features of the underwater laser image, and then uses the principal component analysis to Select underwater laser image features, and finally establish an underwater laser image recognition model. The results show that the method in this paper not only improves the accuracy of underwater laser image recognition, but also obtains good laser image recognition efficiency. It is an effective laser image. recognition methods.

References

[1] Xue Dan, Wang Tiancheng, Zhang Dongxu, et al. Research on Image Information Extraction Algorithm Based on Laser Recognition. Electronic Science and Technology vol. 2, no. 3, pp. 355-357, 2015.

[2] Li Ruoxi, Zhao Yixi, Cao Yuhan, et al. Research on image extraction algorithm of adaptive clustering laser calibration. Journal of Liaoning University of Science and Technology, vol. 2, no. 4, pp. 294-300,308, 2019.

[3] Zhou Xin, Sun Jianfeng, Jiang Peng, et al. Research on laser image target extraction algorithm in complex scene based on threshold segmentation method. Acta Optica Sinica, vol. 12, no. 6, pp.149-157, 2014.

[4] Gu Dongxia, Lu Xueqin, Wang Yudong, et al. Research on weld feature extraction algorithm based on laser vision. Mechanical Manufacturing Abstracts-Welding Volume, vol. 2, no. 7, pp. 42-49 2017.

[5] Zhang Haizhuang, Yao Mei, Lei Ping, et al. Research on image processing method of far-field laser spot. Laser Technology, vol. 37, no. , PP.460-460, 2013.